DRIP TRAY

MICRO MATIC

SURFACE MOUNT 8" X 51"

- Easy installation: simply drill one hole to locate and secure
- Robust 18 gauge stainless steel construction
- Welded corners, finished smooth for safety and appearance
- Perforated screen for maximum drip coverage

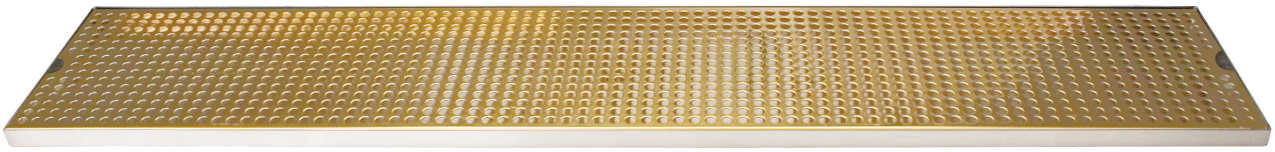

DP-820DSSPVD-51
PVD Brass / Stainless Steel

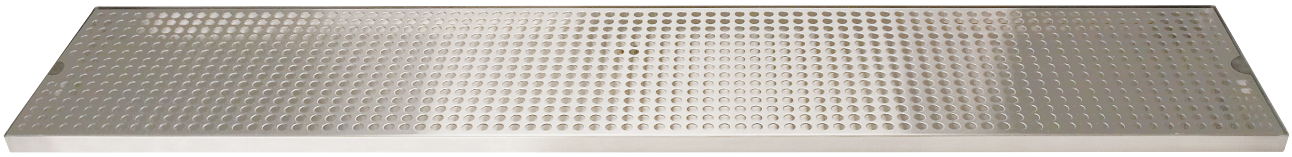

DP-820D-51
Stainless Steel

Job Number:_____ Location: _____

Specifications

Micro Matic reserves the right to change specifications without notice. AutoQuotes

Part No.	Dimensions	Finish	Shipping Weight
☐ DP-120D-51	5"W x 51"L x 3/4"H	Stainless Steel	6 kg 12 lbs
☐ DP-120DSSPVD-51	5"W x 51"L x 3/4"H	PVD Brass / Stainless Steel	6 kg 12 lbs

Dimensions

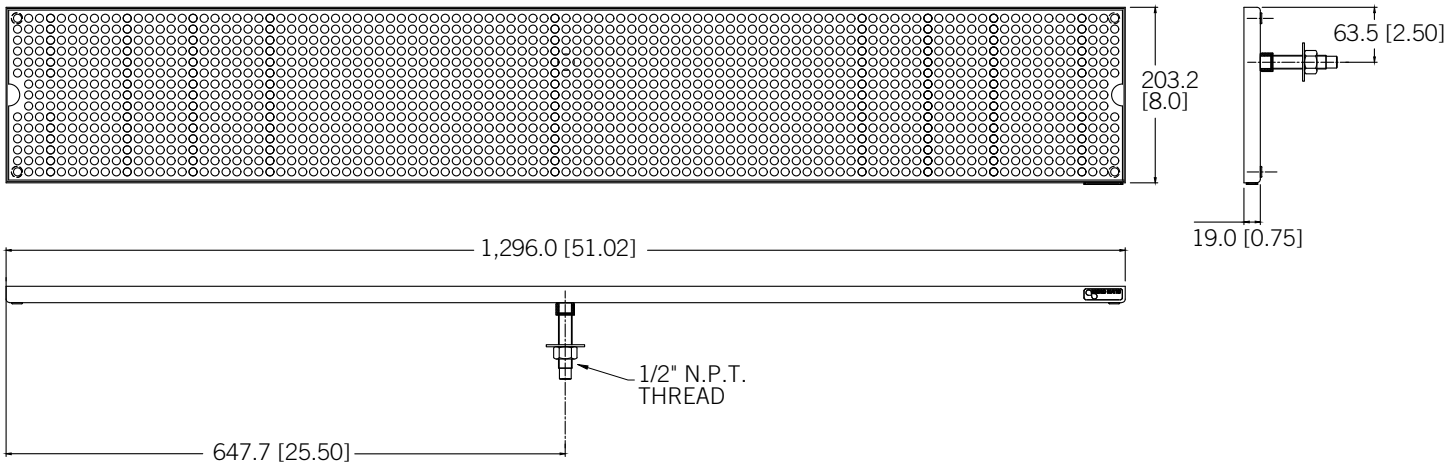

MICRO MATIC

Toll-Free: 1-866-327-4159
www.micromatic.com

West
19791 Bahama St.
Northridge, CA 91324
Tel. (818) 701-9765
Fax. (818) 701-9844

Central
10726 North Second St.
Machesney Park, IL 61115
Tel. (815) 968-7557
Fax. (815) 968-0363

Southeast
15111 Dispense Ln.
Brooksville, FL 34604
Tel. (352) 799-6331
Fax. (352) 796-2429

Northeast
4601 Saucon Creek Rd.
Center Valley, PA 18034
Tel. (610) 625-4464
Fax. (610) 625-4466

000338S-D1117 ©2017 Micro Matic USA, Inc. All Rights Reserved.